Protective function of cable trays

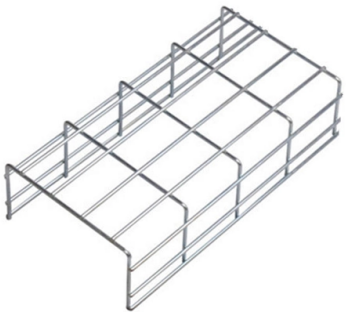

Overview

These trays provide a dedicated safe space for your cables which reduces their exposure to external hazards like moisture, temperature, physical wear and tear, fires, etc. maintain spacing or to keep cables in place when the tray is ect the minimum bend ra-dius for cables as they exit the bottom of the cable tray. A rung spacing of 6 to 9 inches (150 to 230 mm) is preferable when the cable tray cont d for instrumentation and control applications that require. A cable tray system consists of a network of flat support structures that can host electrical wires within buildings or industrial settings. A typical cable tray features a series of open, ladder-like structures made from steel, fiberglass, or aluminum which is installed overhead and in some cases. The cable tray functions are designed to protect and organize cables, ensuring the safe operation of electrical and communication systems. The main functions include: Cable Support: Safely suspending cables off the ground. Structure and Design Cable trays are typically manufactured from metal or fiberglass and come in various designs to suit different applications and environments. protection of solid bottom trays. They have side rails with small.

© 2026 KENHARDT OPTICAL NETWORKS - All rights reserved

Article Content

Cable Tray Technical Guide A practical guide to product selection and ...

Cable tray installed in a hazardous location must contain only those cables that are appropriate for this type of environment as defined in Chapter 5 of the NEC.

Electrical Safety First: How Cable Trays Protect Your

Cable trays act like a robust protective shield that creates a barrier between the wiring and the external environment. These trays can reduce the

Cable Tray Functions in Modern Wiring Systems

Cable trays not only support but also protect cables from external elements. This is especially critical in environments where cables are exposed to

What Is Cable Tray (Purpose, Materials And Applications)

Protection: Solid bottom tray are ideal for environments where cables require protection from falling debris, chemicals, or other contaminants. Security:

What Are Cable Trays and How Do They Work?

The function is to provide a continuous, supported pathway that prevents cables from lying loose and vulnerable to physical damage. The system includes straight sections, fittings, and support hardware.

What are Cable Trays? Everything you need to know

In fire-sensitive areas, trays should be rated for fire resistance to help contain the spread of fire and protect critical electrical infrastructure. Be sure to

Cable Tray Systems: Requirements and Best Practices

Cable tray systems provide a safe, organized, and flexible method for supporting insulated conductors and cables in commercial and industrial electrical installations.

All About Cable Trays And Their Importance For Safe

Cable trays are essential for maintaining the safety, organization, and efficiency of electrical systems. They not only protect cables but also reduce risks associated with electrical hazards.

Cable Trays and Their Uses: Definition, Types, and

It provides a secure pathway that prevents cable damage, simplifies maintenance, and reduces the risk of overheating. Unlike conduits, which enclose cables

Cable Trays Roles: More Than Just Holding Wires

© 2026 KENHARDT OPTICAL NETWORKS - All rights reserved

Cable trays also protect cables. In busy buildings, cables can face dangers like things bumping into them, chemicals, or damp

Cable tray

Several types of tray are used in different applications. A solid-bottom tray provides the maximum protection to cables, but requires cutting the tray or using fittings to

All About Cable Trays And Their Importance For Safe

All About Cable Trays And Their Importance For Safe In modern electrical systems, cable trays have become indispensable for organizing and protecting electrical wires. These essential

What Is Cable Tray (Purpose, Materials And Applications)

What is cable tray? Learn about its types, uses in industries, safety benefits, and how it organizes and supports cables in various environments.

100+ Essential Questions Answered About Cable Trays:

Cable trays, as an important component of modern building electrical systems, play a crucial role in supporting and protecting cable lines, ensuring

What are Cable Trays & Different Types of Cable Trays

Learn what cable trays are & explore the various types, benefits, and purposes. Gain insights into how electrical cable trays can revolutionize your

Types of Cable Trays – Purpose, Advantages,

Cable tray is alternatives to wire ways and electrical conduits, which completely enclose cables. Study types of cable trays, purpose, advantages.

How to Manage Cables in Cable Trays: Principles and Methods

Learn how to manage cables in cable trays effectively with our comprehensive guide for cable classification, protection, and installation to ensure electrical system safety and efficiency.

Cable Tray Systems: Requirements and Best Practices

Comprehensive guide to cable tray systems requirements: tray types, materials, loading, supports, bonding, routing, and best practices for safe electrical cable management.

Related Video Reference

This video was associated with the source search result. Verify technical details against current product documentation and project requirements.

© 2026 KENHARDT OPTICAL NETWORKS - All rights reserved

Contact Us

Continue your research online:

Website: https://kenhardtprimary.co.za
Technical inquiry: https://kenhardtprimary.co.za/project-desk.html
African project coordination: Century City, Cape Town, Western Cape, South Africa

This document is for preliminary research. Verify specifications against current standards, product documentation and project requirements.

© 2026 KENHARDT OPTICAL NETWORKS - All rights reserved