Huijue Optical Module Acquisition

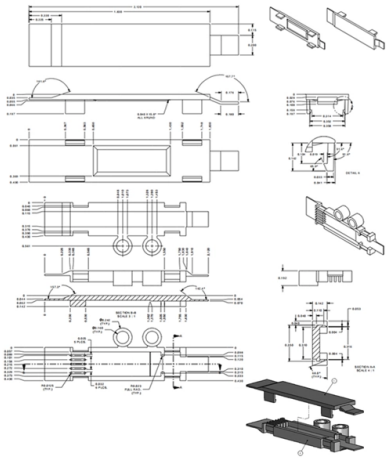

Overview

To help you choose the best partner, this article will analyze and introduce 10 companies in the optical transceiver industry chain for you.

Frequently Asked Questions

What does an optical transceiver do?

Optical modules are mainly packaged by optoelectronic devices TOSA/ROSA, functional circuits and optoelectronic interface components. The optical t...

What is the optical module industry chain?

The upstream industry of optical modules mainly includes optical chips, optical components and optical devices, and the downstream industry mainly...

Who are the main manufacturers and suppliers in the optical module industry chain?

Lorem ipsum dolor sit amet, consectetur adipiscing elit. Ut elit tellus, luctus nec ullamcorper mattis, pulvinar dapibus leo.

© 2026 KENHARDT OPTICAL NETWORKS - All rights reserved

Article Content

Huijue Optical Transceivers Buyers & Importers

Connect with businesses actively looking to buy wholesale Huijue Optical Transceivers at best prices.

10 companies in the optical transceiver industry chain 2024

To help you choose the best partner, this article will analyze and introduce 10 companies in the optical transceiver industry chain for you.

Optical module

OverviewElectrical Interface TypesOptical modulation and multiplexing typesIn-module componentsElectrical cable equivalentFront panel optical module MSAsOn-Board Optical module MSAsUsers of Optical Modules

An optical module is a typically hot-pluggable optical transceiver used in high-bandwidth data communications applications. Optical modules typically have an electrical interface on the side that connects to the inside of the system and an optical interface on the side that connects to the outside world through a fiber optic cable. The form factor and electrical interface are often specified by an interested group using a multi-source agreement (MSA). Optical modules can either plug into a front pa

Chinese Optical Modules Own 7 of the Top 10 Seats. So Why Are

Behind them, Hisense Broadband holds a full chain from optical chips to terminal devices, HG Genuine has secured cost advantages through in-house EML chips and SiPh solutions, and TFC

LightCounting :: November 2025 The year of Silicon

Abstract LightCounting comments on acquisition of Advanced Micro Foundry (AMF) by Global Foundries Silicon Photonics (SiPho) is the hottest optical technology

Buy lc interface huijue optical transceiver, Good quality lc interface ...

Product Overview The TS-QDO8-858H-01C is a cutting-edge 800G QSFP-DD SR8 (Short Reach 8) optical transceiver module designed for next-generation data centers and AI-driven high-performance

Datasheet Archive: HUIJUE EFTL OPTICAL MODULE datasheets

View results and find huijue eftl optical module datasheets and circuit and application notes in pdf format.

Huijue Optical Fiber Energy Storage: Lighting Up the Future of Energy

© 2026 KENHARDT OPTICAL NETWORKS - All rights reserved

Huijue''s optical fiber energy storage uses doped fibers to trap photons (light particles), converting them into stored energy. Think of it as a "light battery" that charges faster than you can say "lithium-ion."

Datasheet Archive: HUIJUE OPTICAL MODULE COMPATIBILITY

View results and find huijue optical module compatibility datasheets and circuit and application notes in pdf format.

HUIJUE OPTICAL MODULE COMPATIBILITY LIST Search Results

View results and find huijue optical module compatibility list datasheets and circuit and application notes in pdf format.

Company Profile-HUIJUE Group

Huijue Group was established in 2002 and is a comprehensive high-tech group that integrates diversified development such as communications, the Internet of

Buy huijue optical module 6, Good quality huijue optical module 6 ...

Product Overview The TS-OPO8-318H-01C is a cutting-edge 800Gb/s OSFP DR8 optical transceiver module designed for next-generation hyperscale data centers and high-performance AI computing

Energy Storage Project Case | Home & Industrial | Huijue Group

Discover Huijue Group''s energy storage Project Case for homes, industries, and microgrids. Explore global projects integrating lithium batteries, BMS, and EMS.

Strategic Acquisition of Photovoltaic Brackets: Market Shifts and ...

With proper due diligence and strategic partnerships, photovoltaic bracket acquisition could well become your organization''s smartest 2024 investment. « Pre.: Paineng Energy Storage

Optical Storage And Charging Integrated Microgrid Solution

Product introduction: The Huijue''s Optical-storage-charging application scenario is a typical application of microgrid energy storage. The core consists of three parts – photovoltaic power generation,

Datasheet Archive: HUIJUE 2960 ADAPTER OPTICAL MODULE

View results and find huijue 2960 adapter optical module datasheets and circuit and application notes in pdf format.

Optical Storage And Charging Integrated Microgrid Solution

© 2026 KENHARDT OPTICAL NETWORKS - All rights reserved

Huijue''s Optical-storage-charging scenario: Microgrid with PV, batteries, & charging piles. Stores solar power, supplies to charging piles. Reduces costs, peaks shaving, & valley filling. Supports grid

Buy lc interface huijue optical transceiver, Good quality lc interface ...

Good quality lc interface huijue optical transceiver from lc interface huijue optical transceiver manufacturer, Buy lc interface huijue optical transceiver online from China.

Additional source notes

An optical module is a typically hot-pluggable optical transceiver used in high-bandwidth data communications applications. Optical modules typically have an electrical interface on the side that connects to the inside of the system and an optical interface on the side that connects to the outside world through a fiber optic cable. The form factor and electrical interface are often specified by an interested group using a (MSA). Optical modules can either plug into a front pa…

Contact Us

Continue your research online:

Website: https://kenhardtprimary.co.za
Technical inquiry: https://kenhardtprimary.co.za/project-desk.html
African project coordination: Century City, Cape Town, Western Cape, South Africa

This document is for preliminary research. Verify specifications against current standards, product documentation and project requirements.

© 2026 KENHARDT OPTICAL NETWORKS - All rights reserved