Formula for Fiber Optic Patch Cord Engineering Quantity

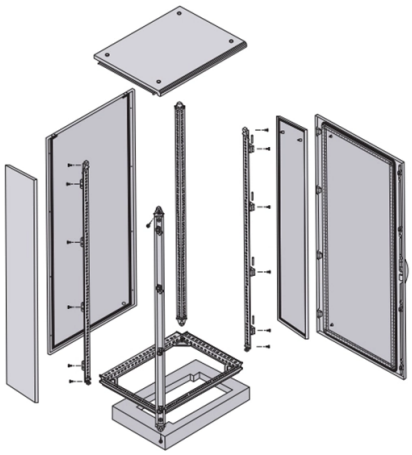

Overview

The fundamental calculation formula is: Total patch cords = Total number of device ports × Connection factor Where the connection factor depends on the connection method: 2. Scenario-Based Calculations The redundancy factor is typically 0 (no redundancy) or 1 (1:1 redundancy). Whether it's a data center, an upgraded telecom network, or designing FTTH systems, selecting the correct cable length ensures optimal. This architecture requires sixteen optical fibers, making MTP-16 connectors a natural choice for modern deployments. The evolution of optical Ethernet can be summarized as follows: As Ethernet speeds continue to increase, parallel optics will remain the dominant transmission architecture for. Search within the title, abstract, claims, or full patent document: You can restrict your search to a specific field using field names. However, we realize that the offer cannot satisfy the needs of each customer. Fiber optic patch cables are ideal for supporting high speed telecommunication network fiber applications. They are manufactured and tested in compliance with TIA 604 (FOCIS), IEC 61754 and YD/T industry standards.

© 2026 KENHARDT OPTICAL NETWORKS - All rights reserved

Article Content

How to Calculate the Quantity of Fiber Optic Patch Cords?

This article provides a systematic guide on calculating the number of fiber optic patch cords, assisting network engineers and project planners in

How to Plan Fiber Optic Patch Cord Lengths Correctly

Learn how to calculate fiber patch cord lengths with accuracy. Ensure optimal performance, slack management, and future scalability.

MPO/MTP Fiber Patch Cords – Engineering Guide for

Explore the engineering fundamentals of MPO/MTP fiber patch cords. Learn about fiber counts, polarity, loss budgets, and high-density data

US5057675A

Commercially available optical fiber patch cord is commonly provided by manufacturers and distributors in fixed lengths. For example, ADC Telecommunications, Inc., Minneapolis, MN (assignee...

Fiber-optic patch cord calculator

After giving all the required parameters, the tool will calculate the price of the patch cord, in accordance with the discount level of the log-in customer. By default, the calculation applies to one piece, the

FIBER PATCH CABLES DATASHEET

Fiber optic patch cables are ideal for supporting high speed telecommunication network fiber applications. They are manufactured and tested in compliance with TIA 604 (FOCIS), IEC 61754 and

Fiber Patch Cable Length

The minimum fiber patch cable length is 1 m for both single-mode and polarization-maintaining fibers. Since there can be issues with even shorter fiber cables we recommend only using fibers with that

Standard Fiber Patch Cables Datasheet

Fiber optic patch cords are key components for efficient, low-loss optical signal transmission between devices and fiber optic cabling links.

Standard Fiber Patch Cables Datasheet | FS

© 2026 KENHARDT OPTICAL NETWORKS - All rights reserved

Fiber optic patch cables are ideal for supporting high speed telecommunication network fiber applications. They are manufactured and tested in compliance with TIA 604 (FOCIS), IEC 61754 and

Best Practices for Fiber Optic Patch Cable Lengths

Explore the optimal cable length for data transmission, cable length limitations, and patch cable length selection. Follow industry standards and

Calculating Fiber Optic Loss Budgets

Power Budgets And Loss Budgets The terms "power budget" and "loss budget" are often confused. The power budget refers to the amount of fiber optic cable plant

what are the international standards for fiber optic patch cord

In summary, these international standards play a crucial role in defining the specifications and best practices for fiber optic patch cords, ensuring they meet the necessary performance criteria while

Key Quality Indicators and Technical Parameters of

A Technical Overview by TARLUZ Fiber Optics Fiber optic patch cords are essential components in modern optical communication networks,

Fiber Patch Cable Guide

GT-SCSCDS2Y-xM fiber optic patch cords are ideal for short distance patching applications. These fiber optic cables have been built to exceed industry standards tested for insertion loss and reflectance on

Fiber-optic patch cord calculator

Description of fiber-optic patch cord calculator After giving all the required parameters, the tool will calculate the price of the patch cord, in accordance with the discount level of the log-in customer. By

Components of the Fiber Optic Patch Cord and Optic

In Part 1 of our Fiber Optic Cable Assembly Manufacturing Series, is an overview of fiber optic patch cord cable construction and optic fiber geometry.

A Comprehensive Guide to Fiber Optic Patch Cables

Fiber optic patch cables are found almost everywhere; cable television networks (CATV), data centers, computer networks, and telephone networks. Fiber optic

Fiber Optic Patch Cord Parameters Customization

© 2026 KENHARDT OPTICAL NETWORKS - All rights reserved

Fiber optic patch cords, and access to the optical module of the fiber optic connector variety, and not common to each other. For example, the SFP module is

Related Video Reference

This video was associated with the source search result. Verify technical details against current product documentation and project requirements.

Contact Us

Continue your research online:

Website: https://kenhardtprimary.co.za
Technical inquiry: https://kenhardtprimary.co.za/project-desk.html
African project coordination: Century City, Cape Town, Western Cape, South Africa

This document is for preliminary research. Verify specifications against current standards, product documentation and project requirements.

© 2026 KENHARDT OPTICAL NETWORKS - All rights reserved