Fiber optic switch interface number

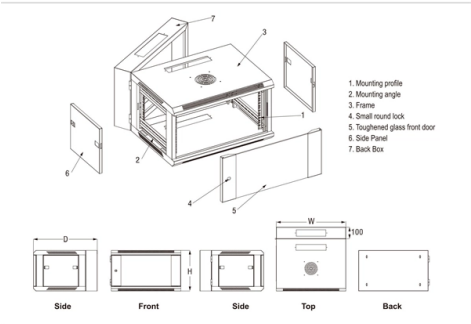

Overview

In the Privileged EXEC mode of the switch, use the show fiber-ports-optical-transceiver command by entering the following: l interface interface-id - (Optional) Specify an Ethernet port ID. Note: In this example, te1/0/3 interface is used. Port - The port. SC interface: SC interface is widely used in industrial switches, with a rectangular appearance and a plug-in pin and latch fastening method, making it easy to operate. There are no specific requirements for this document. Generally, you can use those commands to view specific transceiver vendor names, types, wavelength, distance, Serial Number, Part Number, and DDM/DOM parameters. Look for interfaces with "Fiber" or "Gi" (Gigabit Ethernet) in their names, as these are likely to be fiber ports.

Article Content

Fiber Interface Types and Selection Guidelines for Industrial Switches ...

Single mode fiber combined with appropriate fiber interfaces (such as FC interfaces, which have good stability) can effectively reduce signal loss during transmission, ensuring the

Troubleshoot Fiber Links on Catalyst 9000 Series Switches

This document describes how to troubleshoot fiber optic interfaces by addressing some of the fiber optic module and cabling specifications.

How to show interface transceiver details on Brand Switches?

© 2026 KENHARDT OPTICAL NETWORKS - All rights reserved

The optical interface on the side of the transmission equipment generally uses the SC connector. (3) The "LC" connector is similar in shape to

How to check fiber ports in cisco switch?

Interface details: Use the command "show interfaces" followed by the specific fiber port number to view detailed information about the interface. This will provide

View the Optical Module Status on a Switch through the Command

This article provides instructions on how to view the Optical Module Status on your switch through the Command Line Interface (CLI). The Cisco Small Business Series Switches allow you to plug in a

How To View Port Status And Optical Module Information On Cisco

By reading internal parameters of optical transceivers on switches, users can monitor link status, real-time transmit/receive power, operating temperature and other data. It also verifies coding

Guide to Fiber Network Cards: 10G/25G/100G NIC

Fiber network cards are no longer niche, they''re central to modern servers, storage, and AI infrastructure. From simple 10G upgrades to full 100G

Optical Transceiver Manufacturer,How To Check Optical Module ...

We will introduce how to query the information of optical module on Cisco switch. First, we need to connect to the network, and then log on to the management platform of Cisco switch.

Fiber Optic Switch: A Comprehensive Guide

Mechanical optical switches physically move a fiber, prism, or mirror to redirect the light beam to a different output port. Drive mechanisms include stepper motors, electromagnetic relays,

How Many Core In Fiber Optic Cable Do I Need

The number of fiber cores mainly depends on interface of fiber connection equipment and type of the device,read details in this blog.

Fiber Optic Network Switches

VERSITRON manufactures a wide range of fiber optic switches that provide links for your 10Base, 100Base, 1000Base Gigabit, and 10 Gigabit networks

How to Connect Multiple Ethernet Switches Using Fiber Optic Cables ...

© 2026 KENHARDT OPTICAL NETWORKS - All rights reserved

Most importantly, any upgrades and advancements in networking technology can be easily accommodated by existing fiber infrastructure, offering scalability for future network

How Many Fiber Connector Types Do You Know?

Single-Fiber Connectors Single-fiber connectors here refer to connector types designed to terminate and connect one optical fiber per connector interface.

Fiber Interfaces

Fiber interfaces allow you to transmit data over several miles/kilometers. Even when facing harsh operating conditions, fiber components maintain high availability and redundancy. Plus, optical

Fiber optic cable outlet – Connection with Sunrise

The fiber optic cable (patch cable) is plugged into it and thus forms the optical interface between your device and the fiber optic network connection. A fiber

What is a Fiber Optic Switch?

Also, optical switches can guide optical signals to various available communications pathways to reduce the workload of each fiber and to ensure large-volume data communications.

Computer network

The networking equipment (switches, routers) and transmission media (optical fiber, Cat5 cabling, etc.) are almost entirely owned by the campus tenant or owner (an enterprise, university, government, etc.).

Catalyst 6500 Series 10

This data sheet describes the benefits, specifications, and ordering information for the Catalyst 6500 Series 10- and 100-MBPS Ethernet Fiber-Based Interface Module.

Related Video Reference

This video was associated with the source search result. Verify technical details against current product documentation and project requirements.

© 2026 KENHARDT OPTICAL NETWORKS - All rights reserved

Contact Us

Continue your research online:

Website: https://kenhardtprimary.co.za
Technical inquiry: https://kenhardtprimary.co.za/project-desk.html
African project coordination: Century City, Cape Town, Western Cape, South Africa

This document is for preliminary research. Verify specifications against current standards, product documentation and project requirements.

© 2026 KENHARDT OPTICAL NETWORKS - All rights reserved