Fiber optic patch cords are divided into two main categories

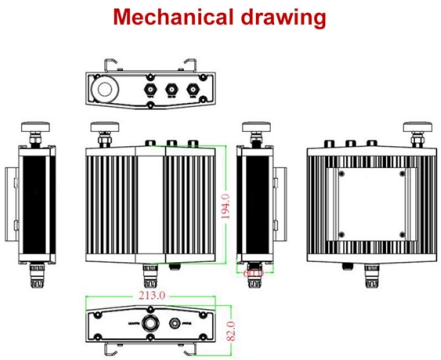

Overview

Fiber Optic Patch Cables: The Complete 2026 Buyer's GuideUnlike backbone trunk cables—which are typically multi-fiber, heavy-gauge, and permanently install.

Key Takeaways

Fiber optic patch cords are mainly divided into two categories: single-mode and multi-mode. Main CategoriesSingle-mode patch cords have a narrow core that allows only one mode of light to pass through, making them ideal for long-distance transmission such as in telecom networks or campus backbones. They typically have a yellow outer sheath and offer low attenuation, ensuring minimal signal loss over extended distances.

Multi-mode patch cords have a wider core that supports multiple light modes, making them suitable for shorter distances like data centers, server rooms, or office networks. They come in various jacket colors to indicate performance levels: OM1/OM2 (orange), OM3 (aqua), OM4 (violet), and OM5 (lime green). Multi-mode fibers provide high bandwidth for short-range applications but are less effective over long distances compared to single-mode.

Additional Classifications

© 2026 KENHARDT OPTICAL NETWORKS - All rights reserved

Beyond fiber type, patch cords can also be classified by working mode: Simplex cords transmit data in one direction only, with one end as the transmitter and the other as the receiver. Duplex cords support bidirectional transmission, allowing simultaneous sending and receiving of data. Patch cords are also distinguished by connector types, including LC, SC, ST, FC, MPO/MTP, and others, which determine compatibility with network equipment.

Summary

In essence, the primary division of fiber optic patch cords is by fiber type: single-mode for long-distance, low-loss transmission, and multi-mode for short-distance, high-bandwidth applications. Additional distinctions, such as simplex vs. duplex and connector type, further define their specific use cases in network setups.

Article Content

Fiber Optic Patch Cables: The Complete 2026 Buyer''s Guide

Unlike backbone trunk cables—which are typically multi-fiber, heavy-gauge, and permanently installed—patch cables are the dynamic layer: they connect servers to switches, patch

Ultimate Guide to Fiber-Optic Patch Cables: Types, Selection, and

There are mainly two types of fiber optic patch cables: single-mode and multi-mode. Single-mode patch cables have a narrow core for transmitting signals over longer distances, typically

Fiber Optic Patch Cords Guide | Types, Connectors & Applications

This guide will help you quickly understand the main types of fiber patch cords and how to choose the right solution for your project – and how ZION can support you with stable quality,

Fiber Patch Cables Explained 2025: Types, Connectors,

Choosing the wrong type of patch cable can cause signal loss, downtime, or higher costs. This guide explains what fiber patch cables are, their

Fiber Optic Patch Cord Types

According to the types of optical fibers, fiber patch cords can be divided into single mode fiber optic patch cables and multimode fiber optic patch cables.

Fiber Optic Patch Cord Guide: Types, Connectors & Technical Basics

© 2026 KENHARDT OPTICAL NETWORKS - All rights reserved

Confused about fiber optic patch cords? Learn the differences between single mode and multimode, LC vs SC vs MPO connectors, and how to read specifications in this practical guide.

A Comprehensive Guide to OM and OS Types with HOLIGHT Patch

Fiber optic cables, the backbone of modern telecommunication, are systematically divided into two main categories: Multimode fiber and Single-mode fiber cables.

Fiber Optic Cable Types Explained: Choosing the Right Fiber Cable

Single mode fiber and multimode fiber are the two primary categories of fiber optic cable. They differ in core size, transmission distance, and application scenarios: Single mode fiber has a small core

Fiber Optic Patch Cord Types

Based on different application environments, fiber optic patch cords can be divided into conventional fiber optic patch cords and reinforced fiber optic patch cords.

Fiber Optic Patch Cord Guide: Types, Connectors

Confused about fiber optic patch cords? Learn the differences between single mode and multimode, LC vs SC vs MPO connectors, and how to

What Are Fiber Patch Cords and Their Role in Networking

Fiber patch cords are essential for connecting devices in networks, ensuring fast, reliable data transfer in telecom, data centers, and industrial applications.

Types of fiber optic patch cords

Fiber optic patch cords can be divided into MPO/MTP, LC, SC, FC, ST and other types according to the connector type. Although they share similar

Fiber Optic Patch Cords: A Complete Guide to Types, Uses, and

Fiber optic patch cords come in various types to suit different applications,At CloudTop Cable,Whether you need single-mode or multimode, simplex or duplex, or custom-length patch cords, we''ve got you

Fiber-optic patch cord

A fiber-optic patch cord is a fiber-optic cable capped at each end with connectors that allow it to be rapidly and conveniently connected to telecommunication equipment.

Fiber Optic Patch Cord Types Explained: SC, LC, MPO & How to

© 2026 KENHARDT OPTICAL NETWORKS - All rights reserved

Discover all major fiber optic patch cord types—including SC, LC, ST, MPO/MTP—and learn how to choose between single-mode and multimode cables. This 2025 updated guide covers

Fiber Patch Cords: A Critical Component in Modern Fiber Optic

Conclusion Fiber patch cords are an indispensable part of the fiber optic network ecosystem. Whether in single-mode or multi-mode configurations, fiber patch cords facilitate the

Fiber Optic Connector Types: A Beginners Guide

The fiber connector types, sometimes referred to as terminations, link fiber optic cables together through terminals, switches, adapters, and patch

Fiber Patch Cables – The Basics | DigiKey

There are several types of fiber patch cables available in the market, including single-mode, multi-mode, simplex, and duplex cables. Choosing the

Related Video Reference

This video was associated with the source search result. Verify technical details against current product documentation and project requirements.

Contact Us

Continue your research online:

Website: https://kenhardtprimary.co.za
Technical inquiry: https://kenhardtprimary.co.za/project-desk.html
African project coordination: Century City, Cape Town, Western Cape, South Africa

This document is for preliminary research. Verify specifications against current standards, product documentation and project requirements.

© 2026 KENHARDT OPTICAL NETWORKS - All rights reserved