400g Fiber Optic Connector

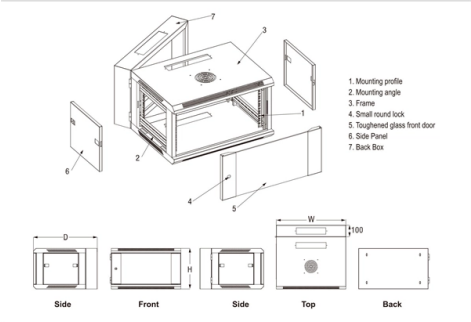

Overview

400G-BIDI transceivers which use the widely deployed MPO-12 UPC optical connector and 4 pairs of MMF (8 total fibers) and, with a reach of 100m / 70m over OM4 / OM4 MMF.

Article Content

400G Fiber Optic Transceiver Cable Ordering Guide FBSG04-WW-ENG

The PanMPOTM Fiber Connector a unique, patented MPO design that specifically addresses today''s needs for fast and efficient Ethernet and Fiber Channel migration to help maximize return on cabling

Panduit Cable Ordering Guide For Cisco 400G Optics

The Cisco QDD-400G-LR4-S module supports link lengths of up to 10km SMF with duplex LC connectors. It is compatible to IEEE 802.3cu for 400GBASE-LR4-6km requirements, but extends the

Arista 400G Transceivers and Cables: Q&A

400G-BIDI transceivers which use the widely deployed MPO-12 UPC optical connector and 4 pairs of MMF (8 total fibers) and, with a reach of 100m / 70m over OM4 / OM4 MMF.

400G Fibre Cabling

© 2026 KENHARDT OPTICAL NETWORKS - All rights reserved

Below are the options for transmission of 400G. 400GBASE-FR4 and 400GBASE-LR4 offer PAM4 transmission of 400G over 2 fibres using four CWDM type wavelengths and supporting distances up

40G, 100G, 400G and 800G Cabling Reference Guide

Arista optical transceiver modules have different connector types (see Arista Transceiver and Cable Guide). With the introduction of 400G, new form factors have been released, including

A Complete Guide to 400G QSFP-DD SR8, DR4, FR4, and LR4

Learn the differences between 400G QSFP-DD SR8, DR4, FR4, and LR4 optical transceivers, including transmission distance, fiber type, connectors, deployment scenarios, and how

SN Series » SENKO Advanced Components, Inc.

The SN is ceramic-based fiber optic connector so compact and flexible that it can be utilized either as a Base-8 trunk solution, a Base-2 patching interface or as a

OSFP 400G DR4 Explained: Standards, Cabling, MPO

The OSFP 400G DR4 optical transceiver is a workhorse for modern data centers—providing cost-effective 500 m reach over SMF with parallel

Know Your 400G Transceiver | Juniper Networks

A 400G transceiver uses multiple lanes of optical signals and advanced modulation techniques to achieve higher capacities. 400G transceivers can employ multiplexing using multiple

400G OSFP AOC

The 400G OSFP AOC (Active Optical Cable) delivers 400 Gbps aggregate bandwidth using the OSFP connector form factor on an integrated active fiber assembly, supporting high-density interconnects

Comparing 8, 12, 16, and 24 Fiber MPO Connectors

Compare 8, 12, 16, and 24 fiber MPO Connectors to understand differences in fiber count, compatibility, and how each type fits your network''s needs.

Active Optical Cables (AOC) | High-Speed Connectors

Accelerate Performance with Amphenol''s Active Optical Cable Portfolio Amphenol is a leading innovator in the development and manufacturing

OptiTap® Fiber Connectors: 2026 Buyer''s Guide

© 2026 KENHARDT OPTICAL NETWORKS - All rights reserved

Evaluate OptiTap® fiber optic connectors for 2026 FTTH networks. Analyze IP68 ratings, deployment trade-offs, purchasing criteria, and installation risks.

Optical Module 400G Qsfp-DD MPO SR4 IB for Huawei H3C NVIDIA

Type Fiber Optic Transceivers Connector Type MPO Power Source / Use Data center/AI computing center/HPC /FTTB Network 5G, 4 G, GPON, EPON, FTTX, FTTB, TCP/IP Model Number QSFP-DD

OSFP 400G Flat-top MMA4Z00-NS400 (50m), for Nvidia, multimode ...

OSFPSR4X100-RHS The OSFP-400G-SR4 is an Infiniband (IB) module operating at a data rate of 400 Gb/s, featuring a single-port configuration and an OSFP-RHS form factor. It is specifically designed

Online Bulk Cable Company | CableWholesale

As a premier online bulk cable company, CableWholesale carries a large inventory of computer cables, USB, HDMI, fiber optic, VGA cables, and more. Shop now!

Set Up a Fiber-Optic Network in Your Home or Office

Learn about the various fiber-optic components used for running fiber in your house, office, or between buildings. Find out how to use fiber optics for

Data Center 400GBASE LR4 QSFP-DD PAM4 1310nm 10km DOM

400G LR4 QSFP-DD Optical Transceiver The 400GBASE-LR4 module, Duplex LC connector, up to 10km over parallel single-mode fiber. It is compliant to IEEE 802.3bs protocol and 400GAUI-8/CEI

Related Video Reference

This video was associated with the source search result. Verify technical details against current product documentation and project requirements.

© 2026 KENHARDT OPTICAL NETWORKS - All rights reserved

Contact Us

Continue your research online:

Website: https://kenhardtprimary.co.za
Technical inquiry: https://kenhardtprimary.co.za/project-desk.html
African project coordination: Century City, Cape Town, Western Cape, South Africa

This document is for preliminary research. Verify specifications against current standards, product documentation and project requirements.

© 2026 KENHARDT OPTICAL NETWORKS - All rights reserved